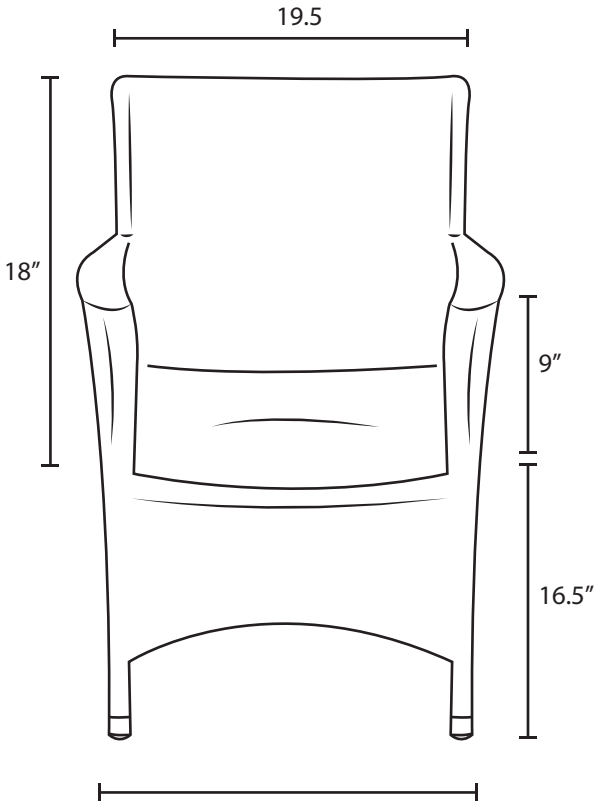

Overall Dimensions: 25.5″
Seat Dimensions: 19″

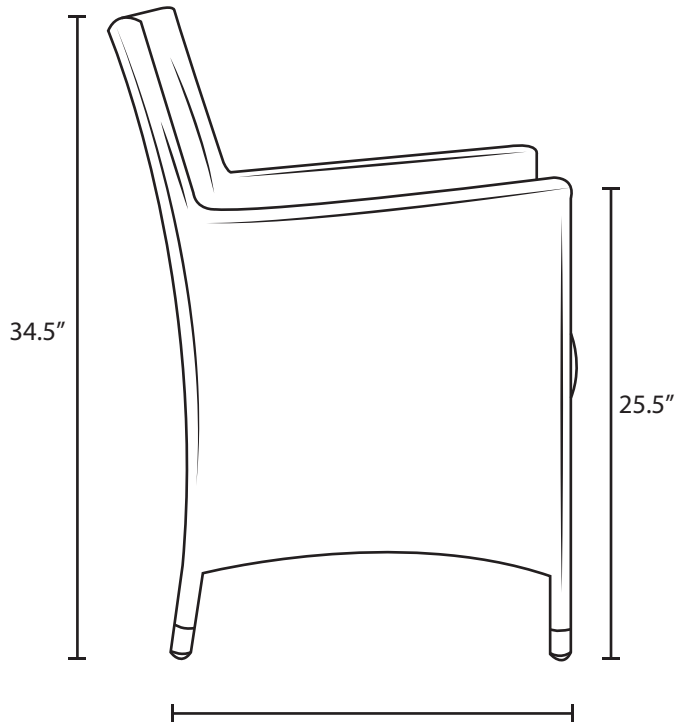

Overall Dimensions: 23″
Seat Dimensions: 19.5″