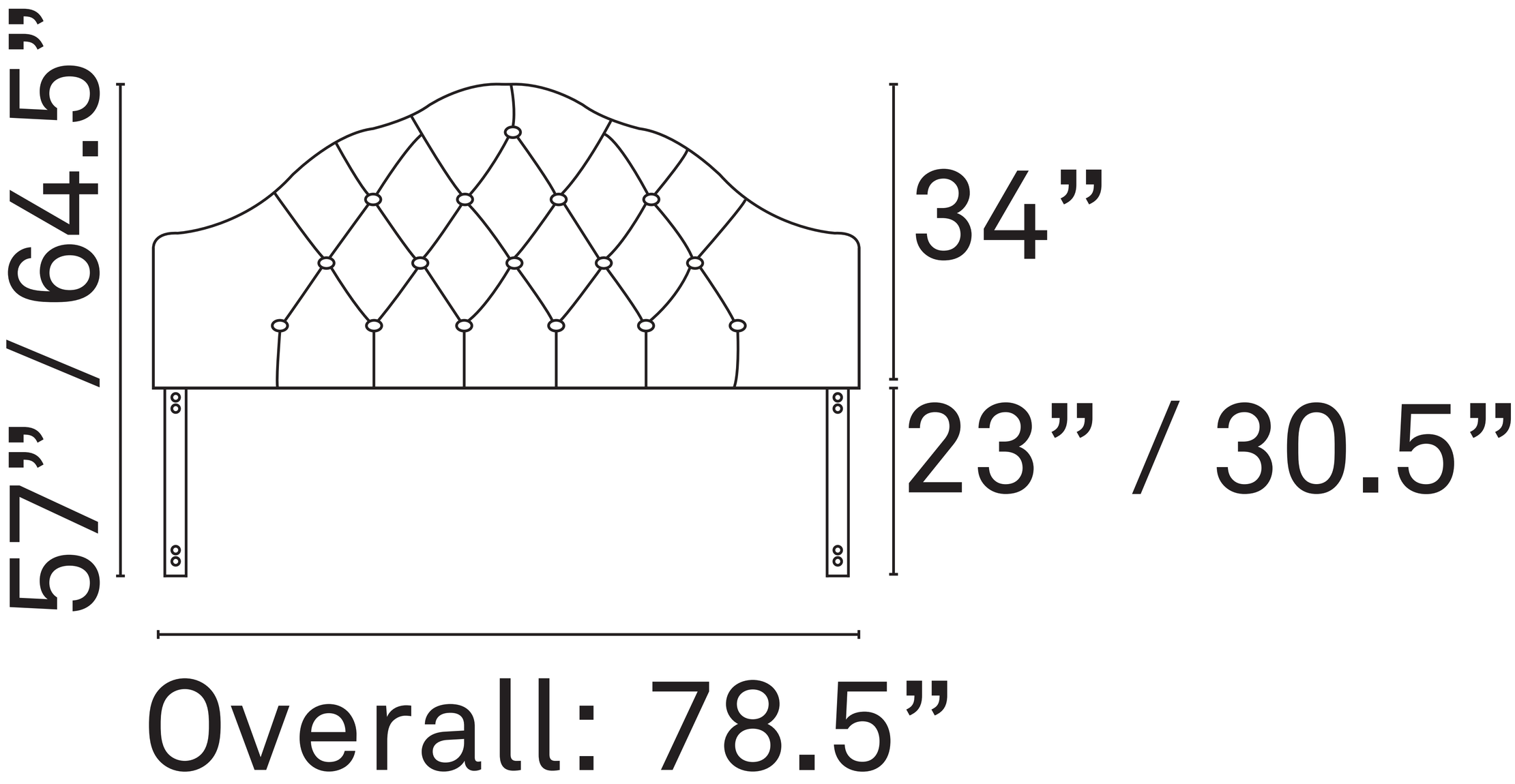
57” / 64.5”
34”
23” / 30.5”
Overall: 78.5”